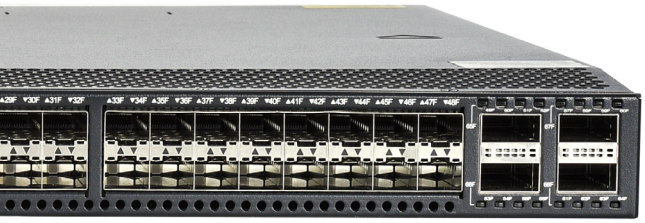

Ruijie RG-S6110-48XS4QXS Switch Datasheet

Ruijie RG-S6110-48XS4QXS is a next-gen switch, offers multiservice ring remarkable performance, enhanced security and smart management. Implementing an industry-leading hardware design and Ruijie's latest RGOS11.X modular operating system, the switches offer better table capacity, improved hardware processing performance, and easier user operation.

RG-S6110-48XS4QXS supports flexible Gigabit access and high-density 10G port. The switch offers fixed 48 10G fiber ports, supporting high-density, high-performance port uplink performance. These leading features fully meet requirements of high-density access and demanding aggregation.

RG-S6110-48XS4QXS, with the outstanding performance-to-price ratio, is ideal acting as aggregation of large-scaled networks, core of small to medium-sized networks. With the end-to-end service performance, and a wide range of security settings available, RG-S6110-48XS4QXS fully satisfies high-speed, secure and intelligent demands of enterprise networks.

Highlights

- **Customized for Large Campus Network: Up to 48 x 10G BASE-X Ports and 4 x 40G BASE-X Uplink Ports**
- **Exceptional Performance: Up to 1.28Tbps Switching Capacity**
- **Network Virtualization: Virtual Switch Unit (VSU) Support**
- **Smart Management: Support Intelligent UI management, Support Management through the Cloud (MACC)**
- **Out-of-box with Advanced Layer 3 Routing and SDN Features**
- **High Reliability: Hot Patches, Power and Fan Redundancy Support**

RG-S6110-48XS4QXS

Product Features

Exceptional Performance

RG-S6110-48XS4QXS offers fixed 48 10G fiber ports. Users can flexibly choose 1G fiber or 10 GE ports in various quantities to meet their actual deployment needs. The unparalleled performance totally supports campus network aggregation of large-sized enterprises, or core deployment of small to medium-sized networks. RG-S6110-48XS4QXS supports MAC address capacity of up to 128K.

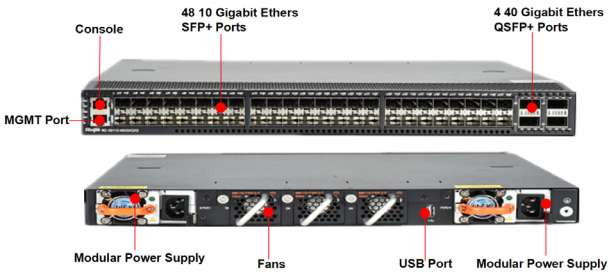

IPv4/IPv6 Dual Stack Multilayer Switching

RG-S6110-48XS4QXS provides hardware support for IPv4/IPv6 multilayer switching at line rates, supports distinction and processing of IPv4 and IPv6 packets by hardware, and provides flexible IPv6 network communication schemes for network implementation planning or maintaining the present network status. The switches also support rich IPv4 routing protocols, including static routing protocols, RIP, OSPF, IS-IS, and BGP4, enabling users to select appropriate protocols for network building in different environments. A wide array of IPv6 routing protocols is also available. Such include static routing protocols, RIPng, OSPFv3, and BGP4+, enabling users to select appropriate protocols for upgrading an existing network to IPv6 or building a new IPv6 network.

Virtual Switch Unit (VSU)

The Virtual Switch Unit technology, or VSU in short, enables interconnection of several physical devices by virtualizing them into one logical device. The logical device uses one single IP address, Telnet process, command-line interface (CLI), and enables auto version inspection and configuration. From the user perspective, the benefits are multiplied work efficiency and enhanced user experience of several devices operating at the same. And they only have to manage one device. The VSU technology also offers multiple benefits below:

• **Easy management**: Administrators can centrally manage all the devices at the same time. It is no longer necessary to configure and manage the switches one by one.

• **Simplified typology**: The VSU is regarded as one switch in the network. By connection of aggregation link and peripheral network devices, MSTP protocol is unnecessary as there is no Layer 2 loop network. All protocols operate as one switch.

• **Millisecond failover**: The VSU and peripheral devices are connected via the aggregation link. Upon failure event of any device or link, failover to another member link requires only 50 to 200ms.

• **Exceptional scalability**: The network is hot swappable, any devices leaving or joining the virtualized network cause zero impact on other devices.

Comprehensive Security Policies

The RG-S6110 effectively prevents and controls virus spread and hacker attacks with various inherent mechanisms such as anti-DoS attacks, hacker IP scanning, illegal ARP packets checking and multiple hardware ACL policies.

• **Hardware-based IPv6 ACL**: Allow coexistence of IPv4/IPv6 users and controls the resources access by IPv6 users (e.g. restrict access to sensitive network resources).

• **Industry-leading CPU protection mechanism**: The CPU protection policy (CPP) distinguishes the data flows sent to the CPU, which are processed according to their priorities, and implements limitations on the bandwidth rate as needed. In this manner, users can prevent the CPU from being occupied by illegal traffic and protect against malicious attacks to guarantee normal operation of the CPU and switch.

• **IP/MAC binding**: Implement flexible binding of a port or the system to the IP address and MAC address of users, strictly limiting user access on a port or in the entire system.

• **DHCP snooping**: Allow DHCP responses from trusted ports only; based on DHCP listening and by monitoring ARP dynamically and checking the user IP address, directly discard illegal packets inconsistent with binding entries to effectively prevents ARP frauds and source IP address frauds.

• **IP-based Telnet access control**: Prevent attacks from illegal personnel or hacker and strengthen the device security.

• **Secure Shell and SNMPv3**: Secure Shell (SSH) and Simple Network Management Protocol v3 (SNMPv3) cryptographic network protocol ensure the security of management information. Provides services such as multi-element binding, port security, time-based ACL and bandwidth rate limiting to block unauthorized users.

• **NFPP**: The NFPP (Network Foundation Protection Policy) enhances switch security. It protects switch processor and bandwidth by totally isolating the attacking sources. Normal packet forwarding and protocol are hence guaranteed.

High Reliability

RG-S6110-48XS4QXS supports spanning tree protocols of 802.1d, 802.1w, and 802.1s to ensure rapid convergence, improves fault tolerance capabilities, ensures stable running of networks and load balancing of links, and provides redundant links.

• **Virtual Router Redundant Protocol (VRRP)**: Effectively ensure network stability.

• **Rapid Link Detection Protocol (RLDP)**: Detect the connectivity of links and whether an optical fiber link is normal from both ends, and supports the loop detection function based on the port to prevent network faults caused by loops generated by the connection of devices such as hubs to ports.

• **Ethernet Ring Protection Switching (ERPS) (G.8032):** Implements loop blocking and link recovery on the master device. Other devices directly report link status to the master device. Without passing through other standby devices, the failover time of loop interruption and recovery is hence faster than STP. The ERSP's link failover rate can be completed within 50 ms under ideal conditions.

• **Rapid Ethernet Uplink Protection Protocol (REUP)**: When Spanning Tree Protocol (STP) is disabled, the Rapid Ethernet Uplink Protection Protocol (REUP) can provide basic link redundancy through the rapid uplink protection function and provide faster subsecond-level fault recovery than STP.

• **Bidirectional Forwarding Detection (BFD)**: Provide a method for upper-layer protocols such as routing protocols and MPLS to rapidly detect the connectivity of forwarding paths between routing devices, reducing the convergence time of upper-layer protocols greatly in the case of changes in link status.

• **Exceptional business support performance**: Support IPv4 and IPv6 multicast with abundant multicast protocols, e.g. IGMP Snooping, IGMP, MLD, PIM, PIM for IPv6, MSDP, etc. The switches offer multicast service for IPv4 network, IPv6 network, and IPv4/IPv6 co-existing network. IGMP source port and source IP inspection are also enabled to crack down on rouge multicast sources. The series offers rich Layer 3 features to meet various link planning needs.

Abundant QoS Policies

RG-S6110-48XS4QXS offers outstanding multilayer traffic categorization and control for MAC traffic, IP traffic, application layer traffic and so on. The feature achieves traffic policies such as refined bandwidth control and forwarding priority. The series also supports customized QoS features for various applications.

The QoS system, with DiffServ as the core, supports a complete set of policies covering 802.1P, IP TOS, Layer 2 to 7 filtering, SP, and WRR.

Software-Defined Networking (SDN)

RG-S6110-48XS4QXS fully supports OpenFlow. In collaboration with Ruijie's SDN controller, it forms a large-scale Layer 2 networking architecture with ease. Smooth upgrade of the whole network to a SDN one is also enabled. The switch series hence greatly simplifies the network management and minimizes network deployment savings.

Easy Network Maintenance

RG-S6110-48XS4QXS supports abundant features such as SNMP V1/V2/V3, RMON, Syslog, and logs and configuration backup using USB for routine diagnosis and maintenance. Administrators can use a wide variety of methods for easier management and such include CLI, Smart web management, Telnet, etc.

Techincal Specifications

Model	RG-S6110-48XS4QXS
Ports	48 1G/10GBASE-X SFP+ ports 4 40G QSFP+ ports
Expansion Slots	NA
Modular Power Slots	2
Fan Slots	3
Expansion Modules	NA
Management Ports	1 console port 1 MGMT port 1 USB 2.0 port
Switching Capacity	1280G bps
Packet Forwarding Rate	960Mpps
Max. Number of 10GE Ports	48
Max. Number of 40GE Ports	4
Port Buffer	9MB
ARP Table	Up to 16K
MAC Address	Up to 128K
Routing Table Size (IPv4/IPv6)	16K/8K
ACL Entries	Up to 1500
VLAN	Port based VLAN, MAC based VLAN, Super VLAN, Private VLAN, protocol based VLAN, IP subnet-based VLAN, GVRP
QinQ	Basic QinQ, Flexible QinQ, 1:1 VLAN switching, N:1 VLAN switching
Link Aggregation	Support LACP (802.3ad)
Port Mirroring	Many-to-one mirroring, One-to-many mirroring, Flow-based mirroring, Over devices mirroring, VLAN-based mirroring, VLAN-filtering mirroring, AP-port mirroring, RSPAN, ERSPAN
Spanning Tree Protocols	IEEE802.1d STP, IEEE802.1w RSTP, Standard 802.3s MSTP, Port fast, BPDU filter, BPDU guard, TC guard, TC protection, ROOT guard
DHCP	DHCP server, DHCP client, DHCP snooping, DHCP relay, IPv6 DHCP snooping, IPv6 DHCP client, IPv6 DHCP relay
Multiple Spanning Tree (MST) Instances	64
Maximum Aggregation Port (AP)	Up to 2,048
SDN	OpenFlow 1.0
VSU (Virtual Switch Unit)	Up to 4 stack members
L2 Features	MAC, ARP, VLAN, Basic QinQ, Felix QinQ, Link aggregation, Mirroring, STP, RSTP, MSTP, Broadcast storm control, IGMP v1/v2/v3 snooping, IGMP filter, MLD snooping, DHCP, Jumbo frame, RLDP, LLDP, REUP, G.8032 ERPS, Layer 2 protocol tunnel
Layer 2 Protocols	IEEE802.3, IEEE802.3u, IEEE802.3z, IEEE802.3x, IEEE802.3ad, IEEE802.1p, IEEE802.1x, IEEE802.3ab, IEEE802.1Q (GVRP), IEEE802.1d, IEEE802.1w, IEEE802.1s
Layer 3 Features	Static routing, RIP, OSPF, OSPF v3, BGP, BGP4+, RIP, RIPng, IS-IS, IS-IS v6
Layer 3 Protocols (IPv4)	Static routing, RIP, OSPF, IS-IS, BGP
IPv4 Features	Ping, Traceroute, URPF, GRE tunnel (4 over 6), GRE tunnel (6 over 4), IPv4 VRF
IPv6 Features	ICMPv6, IPv6 Ping, IPv6 Tracert, Manually configure local address, Automatically create local address, Neighbor Discovery, 0-64 bit mask, 65-128 bit mask, 6 over 4 manual tunnel, 6 to 4 auto tunnel, ISATAP, IPv4 over IPv6 tunnel, IPv6 over IPv6 tunnel, GRE tunnel (4 over 6), GRE tunnel (6 over 6), IPv6 VRF, IPv6 extender option head

Model	RG-S6110-48XS4QXS
Basic IPv6 Protocols	IPv6 addressing, Neighbor Discovery (ND), ND-snooping, stateless automatic configuration, and Path MTU Discovery
IPv6 Routing Protocols	Static routing, OSPF, OSPF v3, BGP, BGP4+, RIP, RIPng, IS-IS, IS-IS v6; Packet–based load balancing and flow-based load balancing
IPv6 Tunnel Features	Manual tunnel, auto tunnel, IPv4 over IPv6, IPv6 over IPv6, GRE tunnel
Multicast	IGMP v1/v2/v3, IGMP v1/v2/v3 snooping, IGMP proxy, IGMP filter, IGMP fast leave, Multicast routing protocols (PIM-DM, PIM-SM, PIM-SSM), MLD snooping, MLD, MSDP, Multicast static routing
G.8032	Support
ACL	Standard IP ACL (Based on IP address); Extended IP ACL (Based on IP addresses and TCP/UDP port number); MAC-extended ACL (Based on source and destination MAC addresses and optional Ethernet type); Time-based ACL; Expert ACL (Based on the flexible combination of VLAN number, Ethernet type, MAC address, IP address, TCP/UDP port, protocol type, and time); ACL80; IPv6 ACL
QoS	802.1p/DSCP/TOS traffic classification; Multiple queue scheduling mechanisms, such as SP, WRR, DRR, SP+WRR, SP+DRR; RED / WRED; Input / output port-based speed limit; Port-based traffic recognition; Each port supports 8 queue priorities
IPv6 ACL	Support
Reliability	VSU (virtualization technology for virtualizing multiple devices into 1); GR for RIP/OSPF/BGP; BFD detection; ERPS (G.8032); REUP dual-link fast switching technology; RLDP (Rapid Link Detection Protocol); 1+1 power redundancy; Hot-swappable power module
Security	Binding of the IP address, MAC address, and port address; Binding of the IPv6, MAC address, and port address; Filter illegal MAC addresses; Port-based and MAC-based 802.1x; MAB; ARP-check; DAI; Restriction on the rate of ARP packets; Gateway anti-ARP spoofing; Broadcast suppression; Hierarchical management by administrators and password protection; RADIUS and TACACS+; AAA security authentication (IPv4/IPv6) in device login management; SSH and SSH V2.0; BPDU guard; IP source guard; CPP, NFPP; Port protection
Manageability	SNMP v1/v2/v3; CLI (Telnet/Console); RMON (1, 2, 3, 9); SSH; FTP / TFTv6; Syslog; SPAN / RSPAN, NTP; SSHv6, Telnetv6, DNS v6; NTP for v6; Traceroute v6; Support sFlow
Hot Patch	Support (the restart process does not affect the existing service forwarding)
Smart Temperature Control	Auto fan speed adjustment; Fan malfunction alerts; Fan status check
Other Protocols	FTP, TFTP, DNS client, DNS static
Dimensions (HxWxD) (mm)	44.0 x 440 x 420
Rack Height	1RU
Weight	RG-S6110-48XS4QXS: 9.85KG (with 3 fans and without power supply) RG-M6110-AC460E-F: 1.68KG M6110-FAN II-F: 0.25KG
MTBF	>200K hours
Safety Standards	EN 60950-1
Emission Standards	EN 300 386, EN 55032, EN 61000-3-2, EN 61000-3-3, EN 55035, EN 61000-4-2, EN 61000-4-3, EN 61000-4-4, EN 61000-4-5, EN 61000-4-6, EN 61000-4-8, EN 61000-4-11
Power Supply	AC input: Rated voltage range: 100V to 240V AC Frequency: 50Hz to 60Hz DC input: Rated voltage range: 192 to 290 V DC Frequency: 50Hz to 60Hz
Power Consumption	<180W
Temperature	Operating temperature: 0°C to 50°C
	Storage temperature: -40°C to 70°C
Humidity	Operating humidity: 10% to 90%RH
	Storage humidity: 5% to 95%RH
Operating Altitude	-500m to 5,000m

Typical Application

• Aggregation layer of a large network, core layer of medium-sized network, and full Gigabit Layer 3 access of buildings in large enterprise or campus networks.
• The 48 fixed 10G BASE-X ports upgrade the network to a 10G uplink backbone to protect user investment.
• Strong security management mechanisms provide network security defense, high-security access control, and effective network access control.

Typical Application 1

As the aggregation layer switch of large campus network, RG-S6110 Switch Switches offers high-performance bandwidth link with 40G aggregation to core and higher bandwidth for the access device to meet the growing demand of user traffic.

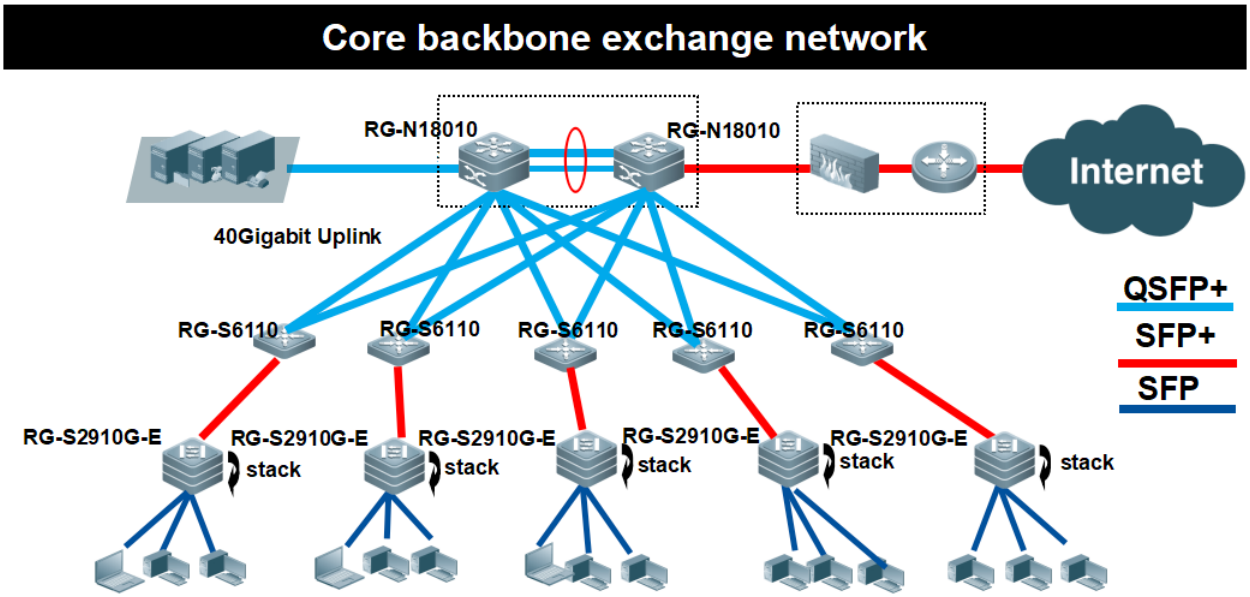

Typical Application 2

The RG-S6110 Switch Switches can be deployed as core switches in small and medium enterprises. The VSU technology not only simplifies the network architecture, but also significantly improves the reliability and efficiency of the network system.

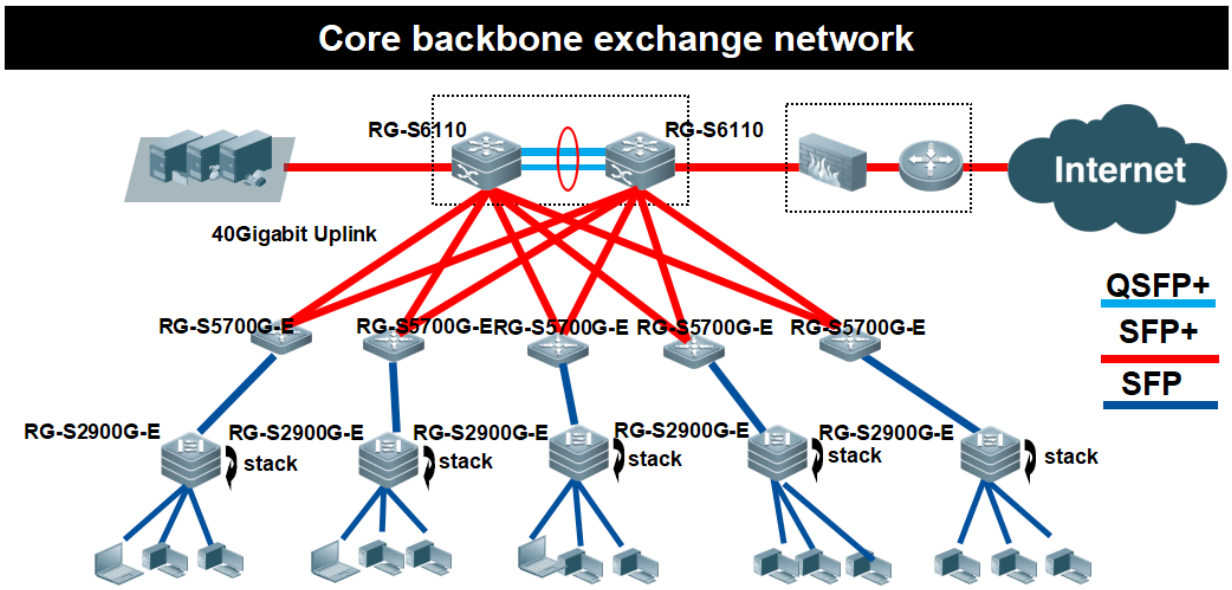

Ordering Information

Model	Description
RG-S6110-48XS4QXS	Fixed 48 10GE SFP+ ports and 4 40GE QSFP+ ports, 2 Power Slots, 3 Fan Slots (with 3 fans and without power supply by factory default)
M6110-FAN II-F	Fan Module, front-to-rear airflow
M6110-AC460E-F	AC power supply module (front-to-rear airflow) with up to 2 power modules, support 1+1 redundancy
Mini-GBIC-GT	1000BASE-GT mini GBIC Transceiver
Mini-GBIC-SX-MM850	1000BASE-SX mini GBIC Transceiver (850nm)
Mini-GBIC-LX-SM1310	1000BASE-LX mini GBIC Transceiver (1310nm)
Mini-GBIC-LH40-SM1310	1000BASE-LH mini GBIC Transceiver (1310nm, 40km)
Mini-GBIC-ZX50-SM1550	1000BASE-ZX mini GBIC Transceiver (1550nm, 50km)
Mini-GBIC-ZX80-SM1550	1000BASE-ZX mini GBIC Transceiver (1550nm, 80km)
Mini-GBIC-ZX100-SM1550	1000BASE-ZX mini GBIC Transceiver (1550nm, 100km)
XG-SFP-SR-MM850	10GBASE-SR, SFP+ Transceiver, MM (850nm, 300m, LC)
XG-SFP-LR-SM1310	10GBASE-SR, SFP+ Transceiver (1310nm, 10km, LC)
XG-SFP-ER-SM1550	10GBASE-SR, SFP+ Transceiver (1550nm, 40km, LC)
XG-SFP-ZR-SM1550	10G ZR Fiber Module for SFP+ ports, 80km
XG-SFP-AOC1M	10GBASE SFP+ Optical Stack Cable (included both side transceivers), 1 Meter
XG-SFP-AOC3M	10GBASE SFP+ Optical Stack Cable (included both side transceivers), 3 Meters
XG-SFP-AOC5M	10GBASE SFP+ Optical Stack Cable (included both side transceivers), 5 Meters
XG-SFP-AOC10M	10GBASE SFP+ Optical Stack Cable (included both side transceivers), 10 Meters
40G-QSFP-STACK3M	40G copper cable for QSFP+, 3m
40G-AOC-5M	40G QSFP+ Optical Stack Cable (included both side transceivers), 5 Meters
40G-QSFP-SR-MM850	40GBASE-SR, QSFP+ Transceiver, MM (850m, 100m with OM3 fiber, 150m with OM4 fiber, MPO)
40G-QSFP-LSR-MM850	40GBASE-SR, QSFP+ Transceiver, MM (850nm, 100m with OM3 fiber, 300m with OM4 fiber, MPO)
40G-QSFP-LR4 SM1310	40G LR Single-mode Fiber Module for QSFP+ interface, transmission distance up to 10km (LC fiber is required, 2-core, wavelength 1310nm)
40G-QSFP-LR4-PSM-SM1310	40G LR Single-mode one divided into four Fiber Module, MPOAPC port, 1310m, the maximum transmission distance is 10KM, after divide support four 10 Gigabit LC port module

INNOVATION
Beyond Networks

For further information, please visit our website: http://www.ruijienetworks.com